# HOLLOW CORE WALLING

## TECHNICAL MANUAL

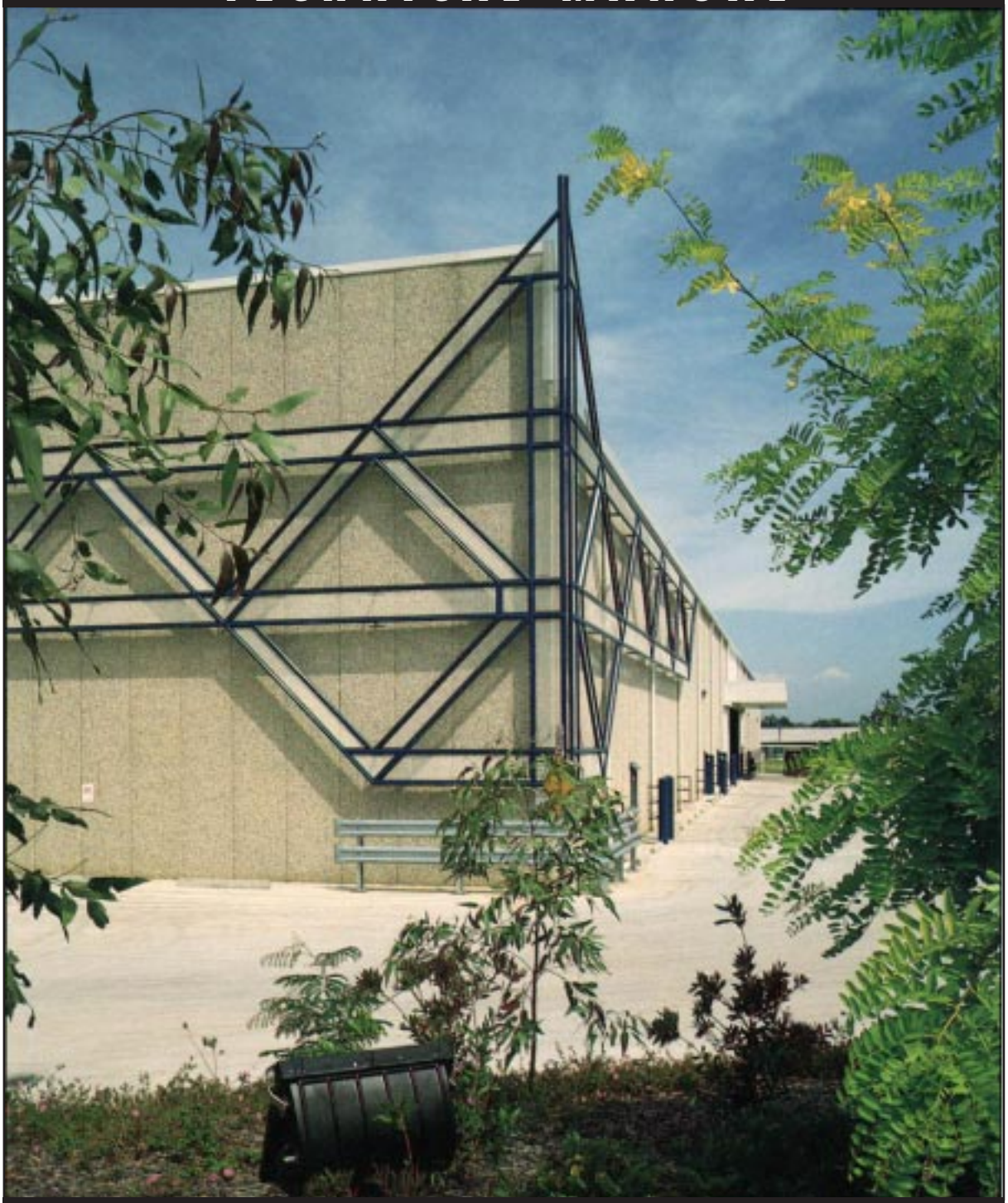

NATIONAL PRECAST CONCRETE ASSOCIATION AUSTRALIA

NPCAA

# HOLLOW CORE PANELS

*Low-slump mix used in Hollowcore manufacture*

*Panel casting completed, panels being covered prior to accelerated curing*

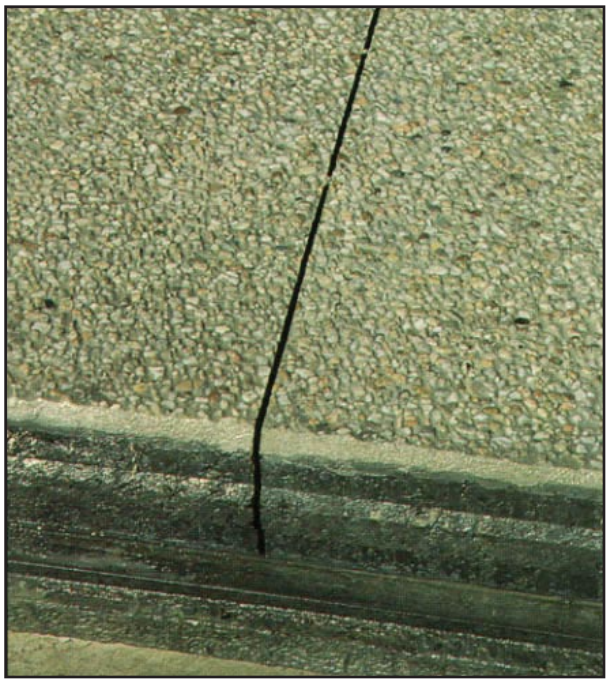

*Neat saw-cut to provide panels of required length*

Hollow core wall panels are precast prestressed units produced on long-line beds using slide-forming or extrusion techniques. Panel widths are normally 1200 or 2400 mm and thicknesses vary from 150 to 300 mm; cores vary in shape depending on the equipment, and in number depending on the performance requirements.

The casting bed is generally up to 200 m long and either steel or concrete. Inserts are cast into the panels as required for connection to the structure. Panels are saw-cut to length on the bed to suit the particular application. Panels are available with a variety of finishes and colours. Surfaces may be either plain, textured, ribbed or exposed aggregate depending on the project requirements and the locality.

*Load-testing hollow core panel*

*Rendered and water-washed edge to panel 10 provide corner return*

# ADVANTAGES

## OF HOLLOW CORE WALL PANELS

### FACTORY-CAST BY MACHINE

Hollow core wall panels are precast in the factory away from the building site. Panels are stored ready for delivery to site as required for installation. Manufacture is unaffected by weather conditions.

### RAPID CONSTRUCTION

Hollow core panels are manufactured to suit the job. This gives simple, fast erection - often with only a three-man crew. Shorter time schedules reduce risk, cut finance costs and provide an income-producing building sooner.

## SIMPLE CONNECTIONS AND FIXINGS

The connections and fixings use simple cast-in ferrules and clips or dowels which connect to the supporting structure. Expansion anchor bolts and toggle bolts are also used.

## REDUCED ON-SITE LABOUR

Only a small erection crew is required to install as much as 300 square metres per day. This typical erection rate can be improved by the allocation of increased erection resources. The time of tradesmen on site is kept to a minimum. Expensive formwork, scaffolding or temporary props are eliminated.

## EFFICIENT LIGHT-WEIGHT SECTION

The hollow cores and prestressing result in panels that are light in weight but strong. The thickness and the strand pattern can be varied at minimum cost to suit the wall height and load requirements.

## DESIGN FLEXIBILITY

Panels can accommodate most building requirements including openings, roof slopes and cantilever parapets.

## DURABILITY

Concrete quality meets the durability requirements of AS 3600 Concrete Structures. Strand cover may be varied to suit particular exposure classifications.

## SECURITY

Precast prestressed concrete is inherently robust, secure and vandal resistant.

## REDUCED SUPPORT REQUIREMENT

The availability of hollow core wall panels in long lengths reduces the requirement for supporting members. Wall panels may be placed either vertically or horizontally to suit structural and/or aesthetic requirements.

## HIGH LOAD CAPACITY

Prestressed hollow core wall panels resist high wind loadings in severe exposure conditions without the need to increase the wall thickness.

## FIRE RESISTANCE

Fire resistance periods up to 240 minutes (4 hours) can be provided to meet building regulation requirements. Various combinations of panel thickness and core layout may be selected to suit the project design.

*(Left)* A building shortly after a blaze described by the Fire Authority as *a very significant fire source.* Panels remained serviceable, requiring only cosmetic treatment.

## SOUND INSULATION

The low sound transmission property of hollow core panels reduces the amount of noise transmitted through walls. Sound Transmission Class ratings as specified in the Building Code of Australia can be met for a variety of occupancies.

## THERMAL INSULATION

Hollow core wall panels have a good resistance to heat transmission and the capacity to absorb and store large quantities of heat. This thermal mass reduces peak heating and cooling loads.

## FINISHED SURFACES

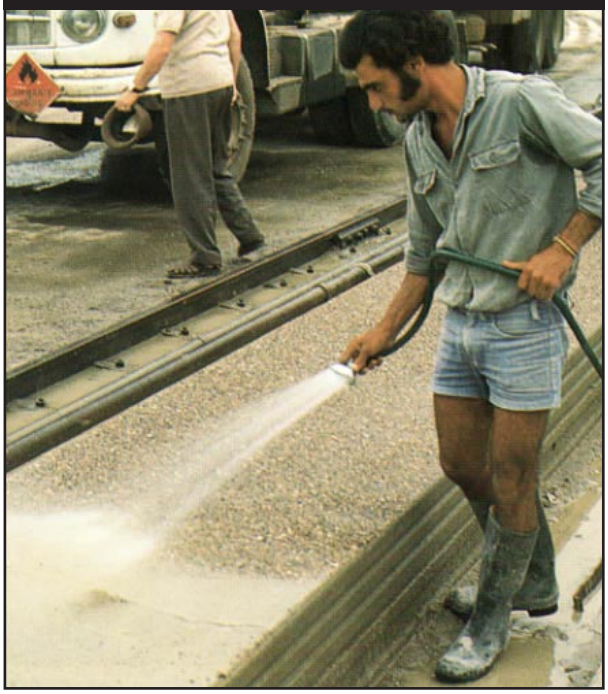

The outside face is usually prefinished in the factory to give a durable and visually pleasing appearance. Exposed aggregate finishes (by water-washing, *far left*) provide low-maintenance walls in a range of colours and textures.

Other finishes such as ribbed *(top left)*, raked or broomed surfaces are available from some manufacturers.

Applied finishes using coatings or paint *(bottom left)* can be used on both external and internal wall surfaces if required, following the coating- or paint-manufacturer's recommended surface preparation.

Internally in wet areas, tiles may be fixed direct, whilst in locations such as offices, plasterboard may be applied to the suppliers recommendation. Cement render and set plaster finishes are also suitable.

## SERVICE DUCTS

Longitudinal ducts in panels can be used as service ducts to conceal services such as plumbing, electrical and telephone cables. Breakouts can be drilled as required.

## EARTH RETAINING

The structural capacity of the panels can be utilised to retain fill material.

## COMPLETE PACKAGE

Hollow core wall panels are in many cases manufactured, delivered, placed in position and joints between panels sealed by the manufacturer as a complete package.

# APPLICATIONS

*Use of a darker river gravel to lower panels providing a visual plinth*

*Locating panel on dowels*

*Panels used in vertical mode*

*Horizontal application*

*Horizontal painted application*

# HOLLOW CORE WALLING

## PLANNING AND DESIGN

### General

Hollow core wall panels are produced in standard widths of 1200 and 2400 mm depending on the Manufacturer's machine module. They are cast on long-line beds and cut to length to suit the wall height – or span in the case of horizontal panels. In planning a structural arrangement considerable benefits are achieved by establishing a framing concept for a hollow core module and span capability rather than substituting hollow core wall panels for traditional masonry in a layout prepared for the latter.

*Manufacturers provide a technical advisory service and assistance wfth feasibility studies. Their advice should be sought at the preilminary stage of a project so that a cost-effective and practical design is achieved.*

In developing a framing plan using hollow core wall panels the principal considerations are the span and the modular width. The panel thickness depends on the structural requirements of the loading and the span. The fire resistance period also determines the required effective thickness of the panel.

### Panel Width

It is desirable that the planning grid should suit the modular width of the panels – either 1200 or 2400 mm. Non-modular dimensions are accommodated using special-width panels made by either longitudinal sawing or casting narrower widths. These special panels can be kept to a minimum by locating openings such as doors and windows to suit the modular width.

### Panel Thlckness and Length

For a preliminary design the panel thickness may be selected to satisfy siructural requirements by using the typical panel properties (page 12). To limit deflections in service the ratio of span (ie the length between the fixings) to overall thickness is usually restricted to 50. For handling and erection purposes the ratio of overall length to thickness should not exceed 60.

The effective thickness of the panel is selected to suit the required fire resistance level; this may control the overall thickness of the panel.

In some cases the exposure conditions and required durability may control the cover to the strands and thus the overall thickness of the panel.

### Cantilevers

Hollow core wall panels may be used for cantilevers projecting above the structure and roof line to form parapets and the like. As wall panels are usually provided with uniform prestress, the extent of any cantilever is limited by the stresses induced in the cantilever under lateral load. In practice, cantilevers are limited also by the need to restrict deformation arising from differential temperature on the faces of the panel.

### Connections and Joints

The type and details of the connections between the panels and the supporting structure should be chosen to suit industry standards. Examples of suitable connections and joints that have been developed to suit practical construction and design conditions are shown on pages 14–16.

### Tolerances

Construction tolerances must be allowed for in developing a layout. Tolerance in panel length is accommodated by allowing a variable gap at the bottom grouted support of a vertical panel and/or fixing a cover flashing or capping at the top of the panel. Tolerance in panel width is accommodated by a variation in nominal joint width to maintain the module along the wall.

Horizontal panels are generally supported at their ends, hence the visual effects of temperature change should be considered where long panels are used.

**Design Requimments**

Hollow core wall panels are designed to comply with AS 3600 *Concrete Structures* and the relevant building regulations. The design of a hollow core wall is undertaken usually in two stages:

- Preliminary design when the general layout, overall dimensions of the panel and the typical details are selected to suit the building requirements
- Final design when the details of the panel – strand pattern, connections, special cut-outs and the shop drawings are produced.

The preliminary design is carried out by the designer responsible for the project and is incorporated in the contract documents. The detailed final design is usually undertaken by the manufacturer and based on a performance specification. The structural engineer provides full details of the design criteria, including lateral loads and any vertical loads to be resisted, and the interface requirements with other construction materials and building elements. This is especially important in the case of walls that are required to act partly as retaining walls and thus resist lateral earth pressure. The Fire Resistance Levels and any other statutory requirements should also be specified.

The Manufacturer usually provides full details of the connection type and details of any items embedded in the panels. The Manufacturer also liaises with the builder to ensure that any embedments in the structure are provided.

*The builder must approve the shop drawings for dimensional accuracy and details and for suitability for inclusion in the project, including adequacy for following trades.*

**Load Distribution**

Wall panels are usually designed to resist lateral loads as simple one-way-spanning slabs. The interlocking keys between adjacent panels provide some capacity for load distribution and some restraint against the independent movement of adjacent panels. These keys may be relied upon to distribute loads arising from minor openings such as access doors and windows. The transfer of significant forces or concentrations caused by large openings should be investigated.

## DESIGN CHECKLIST

**1** Determine a feasible arrangement for the basic-structure, columns, beams and wall panels. Note options for vertical and horizontal application of panels.

**2** Establish the basic design data:

Occupancy of the building
Fire resistance (building regulations)
Sound transmission (building regulations)
Exposure classification and durability requirements (AS 3600).

**3** Select a suitable overall thickness of panel to satisfy handling and serviceability requirements. Typical slenderness limits are (where 't' is the actual panel thickness):

Overall length – 60 t
Length between fixings – 50 t
Cantilever length – 8 t.

**4** Check against the required minimum effective thickness for fire resistance, sound transmission, and the minimum concrete strength and cover for durability established in item 2 of this check list.

**5** Determine the dead, live, wind and any other loads acting on the wall. Any concentrated loads or large openings should be assessed separately.

**6** Check the strength capacity of the panel and the connections. Note: for simple panels subject to nominal vertical and wind loads a comparison with standard capacities is usually sufficient.

## PLANNING AND DESIGN

The fire resistance period of a wall is defined in the *Building Code of Australia* (BCA) as the period in minutes for which the wall must retain its structural adequacy, integrity and insulation when subjected to the standard fire test.

AS 3600 specifies the design for fire resistance to be met either by testing or calculation or by proportioning members to comply with certain rules. Some manufacturers can provide fire test certificates.

In practice the deemed-to-comply rules are adopted usually as a convenient method of compliance (note that where a fire rating has been established by test, manufacturers are not governed by the effective-thickness principle). Two criteria must be satisfied:

- Insulation requires a minimum effective thickness of concrete and a minimum thickness of concrete between adjacent cores and between a core and the surface exposed to the fire.
- Structural Adequacy requires a minimum concrete cover to the prestressing strand. For a wall, integrity is deemed to be satisfied if the criteria of insulation and structural adequacy are met.

A wall usually provides a fire-separating function, ie it restricts the spread of fire from one compartment to adjoining compartments. In this instance the wall is exposed to fire on one side only. Where a wall does not provide a fire-separating function and can be exposed to fire on both sides simultaneously, then it must be treated as a column in accordance with Clause 5.6 of AS 3600.

Traditionally walls have been classified as loadbearing or non-loadbearing with different criteria for assessing their structural adequacy under fire loading. This has created some anomalies which have been eliminated or simplified in AS 3600. A loadbearing wall is defined in AS 3600 as a member intended to support or transmit axial load additional to its own weight and where the design axial force at mid-height is greater than 0.03 $f'_c A_g$ (where $f'_c$ is the characteristic compressive strength and $A_g$ is the gross cross sectional area).

Note that the design axial force is the load combination for fire resistance given in Clause 3.5 of AS 3600. Other walls are deemed to be non-loadbearing.

The practical effect of this definition is to permit a wall panel to support loads such as roof loads and local concentrations at door openings and be treated as a non-loadbearing wall. Provided that the slenderness ratio does not exceed 50, such a wall is deemed to be structurally adequate. In practice most walls in industrial buildings satisfy those deemed-to-comply provisions for non-loadbearing walls.

For loadbearing fire walls the slenderness ratio is not to exceed 20 and a minimum cover to the strand is required for each fire resistance level.

These limits for slenderness ratio and design axial forces are shown diagrammatically in Figure 1 as two zones corresponding to loadbearing and non-loadbearing walls.

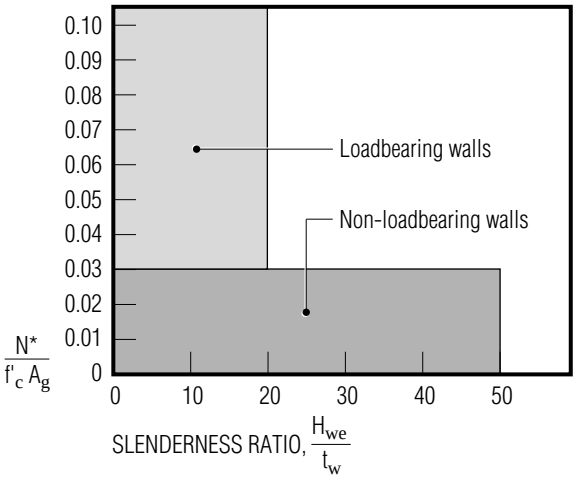


**Figure 1** *Structural adequacy – fire-rated walls*

The deemed-to-comply requirements of AS 3600 are summarised in the following table:

| **Fire Resistance Period** (minutes) | **Effective thickness** (mm) | **Min. concrete thickness between cores and between cores and surfaces expossd to fire** (mm) | **Min. cover to strand: for loadbearing walls** (mm) |
|---|---|---|---|
| 30 | 60 | 25 | 30 |
| 60 | 80 | 25 | 30 |
| 90 | 100 | 25 | 30 |
| 120 | 120 | 25 | 30 |
| 180 | 150 | 30 | 35 |
| 240 | 170 | 34 | 45 |

For a hollow core panel the effective concrete thickness is taken as the net cross sectional area divided by the width of the cross section. The equivalent thickness of a hollow core panel depends on the size and spacing of the cores.

Manufacturers can vary the layout of cores in a wall panel to provide a range of Fire Resistance Levels in the same overall panel thickness. For example a 200-mm-thick panel may be produced to provide fire resistance periods of 120,180 or 240 minutes. The required covers to the strand in the above table apply for load bearing walls. AS 3600 does not specify the cover for non-load bearing walls. In practice, however, a minimum cover of 30 mm is usually provided.

The Fire Resistance Level of wall panels is preserved at the standard key joint since the gap at this joint is sufficiently narrow to maintain the integrity of the wall. In practice some plain butt joints occur with vertical panels at the corners of buildings and where panels are saw-cut to fit closing dimensions. Butt joints occur also at the ends of horizontal panels, usually adjacent to a supporting column.

Fire tests have shown that a fire rating can be achieved with a simple butt joint depending on the width and depth of the joint. For example, a 200-mm-thick panel with a joint width of 10 mm, where the cores are not sealed at the ends gives a fire resistance level of 90 minutes. Sealing the cores increases the fire resistance level to 180 minutes. Alternatively, the joint may be filled with a suitable depth of fire-resisting material. Where gaps are wider than 10 mm the fire-resistance level is reduced; in this case filling with fire-resisting material is a practical solution. Reference should be made to the paper *Fire Tests of Joints Between Precast Wall Panels* by Gustaferro and Abrams, PCI Journal, September 1975 for further details.

## SOUND INSULATION

Hollow core wall panels can provide a high level of resistance to both sound transmission and impact sound. One important measure of the resistance of a material or system to sound transmission is the Sound Transmission Class (STC) rating. It is a single-number measure of the sound transmission loss of airborne sound through the unit. The larger the value of STC the greater the sound insulation. Building regulations specify minimum values of sound insulation for floors and walls separating different occupancies in residential building. Under the BCA a wall separating flats must have an STC of 45 or more. A 150-mm hollow core panel with sealed joints meets this requirement.

Impact sound is produced by one object striking another. The Impact Insulation Class (IIC) is a single-figure rating of the overall impact sound insulation performance of a wall.

In most practical situations, hollow core panels satisfy requirements of sound insulation against both transmission and impact without any difficulty.


*use of hollow core panels in a suburban cinema complex*

## DURABILITY AND EXPOSURE CONDITIONS

Hollow core wall panels are cast using concrete with a low water-cement ratio and a typical concrete strength of 40 MPa. This concrete is inherently durable and protects the strands provided that the thickness of cover chosen is appropriate for the degree of exposure.

Durability of hollow core panels is further improved by their crack-free characteristic resulting from prestressing.

AS 3600 provides a classification of typical exposure conditions to cover the range from an internal enclosed environment to exterior environment with exposure conditions of different degrees of severity:

| **Typical exposure** | **Classification** | **Cover of 40-MPa concrete** (mm) |
|---|---|---|
| Enclosed within Building | A1 | 20 |
| Inland and non-industrial | A2 | 20 |
| Industrial or 1–50 km coastal | B1 | 30 |
| 0–l km coastal | B2 | 45 |

## PANEL SECTIONS AND CAPACITIES

Hollow core manufacturers each have a standard set of cross sections that can be produced by their particular machine. For panel thicknesses from 150 to 300 mm various layouts of cores can be used to meet fire resistance levels and durability requirements. The prestressing strands are usually located in the top and bottom of the panel to give a uniform effective prestress of approximately 2 MPa. Manufacturers' product literature should be consulted to obtain specific details of panel dimensions, core size and layout, section properties and prestressing.

For the purpose of this national manual, typical section properties are provided as an aid to preliminary design and to illustrate the steps in a simple calculation.

| **Nominal panel thickness** (mm) | **Effective thickness** (mm) | **Fire resistance period** (minutes) | **Mass** (kg/m$^2$) | **Max. spacing of fixings – non-load-bearing units*** (m) |
|---|---|---|---|---|
| 150 | 100 | 90 | 240 | 7.5 |
| | 125 | 120 | 300 | 7.5 |
| | 150 | 180 | 360 | 7.5 |
| 200 | 125 | 120 | 300 | 10.0 |
| | 150 | 180 | 360 | 10.0 |
| | 175 | 240 | 420 | 10.0 |
| 250 | 150 | 180 | 360 | 12.5 |
| | 175 | 240 | 420 | 12.5 |
| 300 | 190 | 240 | 460 | 15.0 |

* *Loadbearing panels should be checked for structural adequacy in accordance with AS 3600.*

These values of effective thickness and mass are approximate and should be used for preliminary design only. More-accurate values may be obtained from manufacturers' literature.

Further, the values are based on:

- Concrete strength – $f'_c$ = 40 MPa
- Prestressing strand – ultimate tensile strength
  9.3-mm strand – 102 kN
  12.7-mm strand – 184 kN

These values are for the widely-used, super low-relaxation strand.

For many applications the calculation of the strength of wall panels may be simplified by using the design procedures given in Clause 11.2 of AS 3600. For the common case of a wall subject principally to horizontal forces perpendicular to the wall, Clause 11.2.4 of the Standard may be used. In this instance, if the design vertical force N* does not exceed 0.03 $f'_c A_g$ and the ratio of the effective height to thickness does not exceed 50, then the wall may be designed as a slab in accordance with Section 9 of the Standard.

For a panel width of 1200 mm and concrete strength of 40 MPa this limit on design vertical force is directly proportional to the effective thickness of the panel. Typical values are set out in the following table.

**Limiting Axial Capacity**

$N^* = 0.03\ f'_c\ A_g$
(AS 3600 Clauses 11.2.4 and 5.7.4)

| **Width** (mm) | **Effective thickness $t_e$** (mm) | **N*** (kN) |
|---|---|---|
| 1200 | 100 | 140 |
| | 125 | 175 |
| | 150 | 210 |
| | 175 | 245 |
| | 190 | 265 |

The bending strength of a wall panel may be calculated in accordance with Clause 8.1 of AS 3600. For the usual case of a nominal level of prestress of approximately 2 MPa and a concrete strength of 40 MPa, the bending strength of the panel is approximately proportional to the effective strength of the strands and the effective depth of the cross section. Typical values are set out in the following table.

**Approximate Moment Capacity**

$M^* = f\ M_u$
(AS 3600 Clause 8.1)

| **Effective depth to each face** (mm) | **No. of 9.3-mm strands** | **M*** (kNm) |
|---|---|---|
| 100 | 4+4 | 29 |
| 150 | 4+4 | 45 |
| 200 | 6+6 | 92 |
| 250 | 6+6 | 114 |

## PANEL FIXING DETAILS

Hollow core wall panels have been used for many years and standard industry details have been developed to provide economical, simple and satisfactory connections. Most of these are illustrated in the following standard fixing details. For special situations or unusual load cases, particular connections are designed to suit. The manufacturer should be asked for advice on suitable fixing and connection details for a particular application.

The basic connection to a hollow core panel is either by bolting to a ferrule cast into the panel and anchored directly by the strand, or by drilling through the core wall and bolting to a backing plate which is inserted into the core. Working loads from tension and shear have been determined from pull-out tests on these connectors. The manufacturer can supply details of these standard connections and their design capacity.

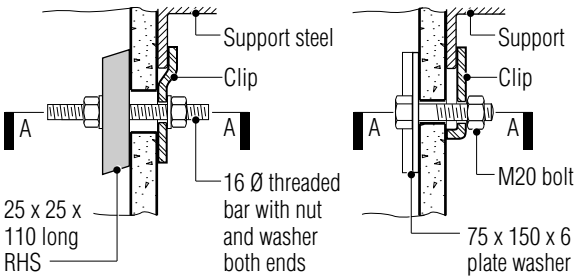


NOTE: All fittings to be either galvanised or cadmium plated

TYPE 1 CLIP AND FIXING

TYPE 2 CLIP AND FIXING

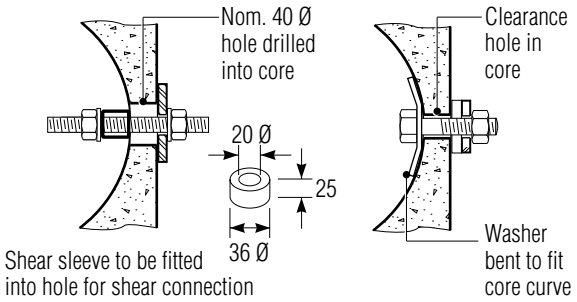


SECTION A-A

SECTION A-A

TYPICAL DRILLED CONNECTION DETAILS

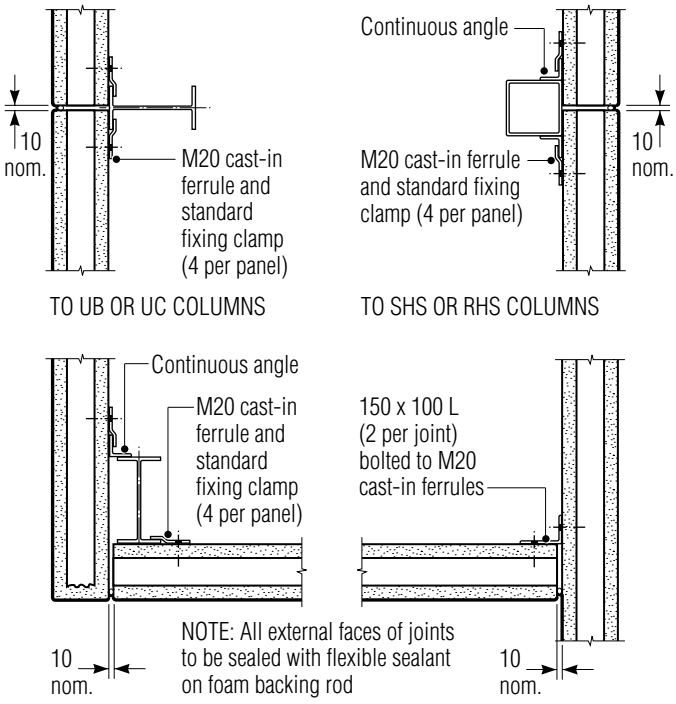


TO UB OR UC COLUMNS

TO SHS OR RHS COLUMNS

TO COLUMN AT CORNERS

PANEL TO PANEL

TYPICAL FIXING DETAILS FOR HORIZONTAL PANELS

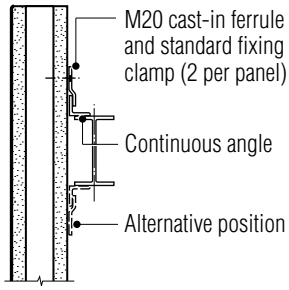


TO RAFTER

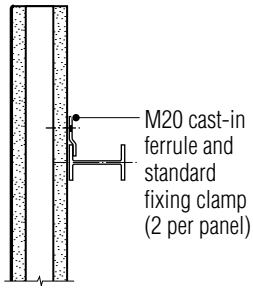


TO TIE BEAM

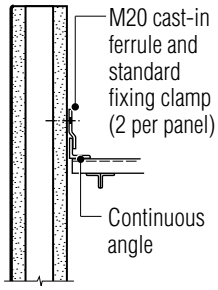


TO TRUSS

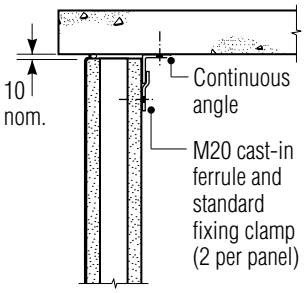


TO CONCRETE FLOOR

TOP CONNECTIONS

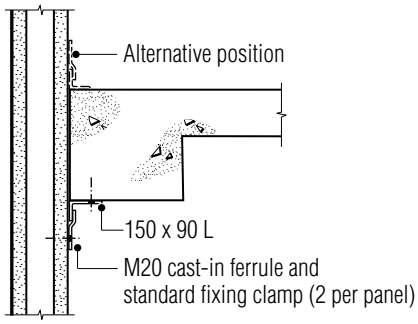


TO CONCRETE EDGE-BEAM

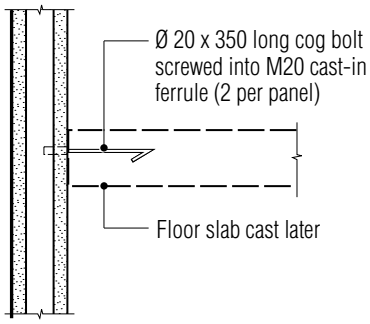


TO INSITU FLOOR SLAB

INTERMEDIATE CONNECTIONS

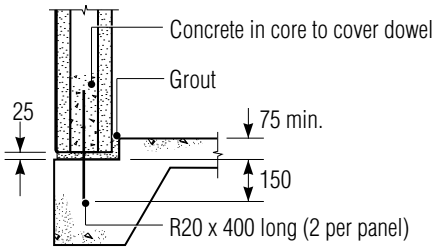


TO RAFT SLAB

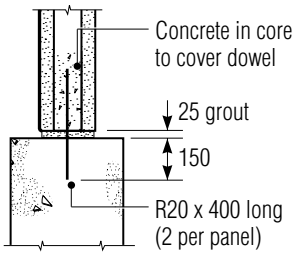


TO STRIP FOOTING

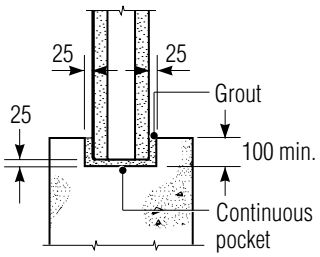


TO STRIP FOOTING

BASE CONNECTIONS

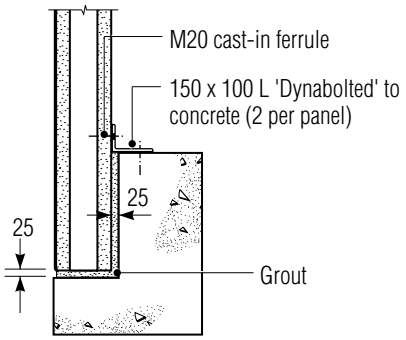


TO PRECAST LINTEL

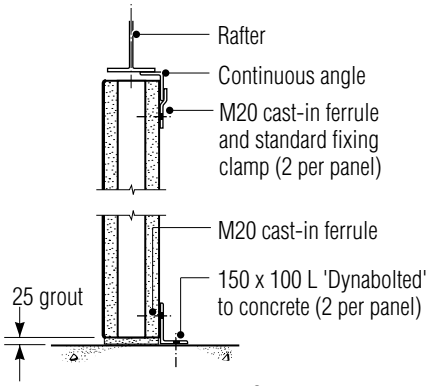


INTERNAL PANELS

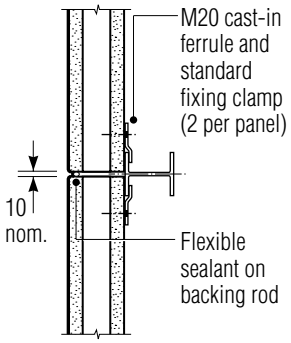


MID-HEIGHT FIXING

SPECIAL CONNECTIONS

TYPICAL FIXING DETAILS FOR VERTICAL PANELS

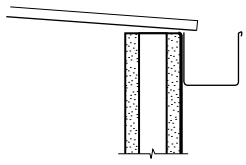


AT EAVES GUTTER

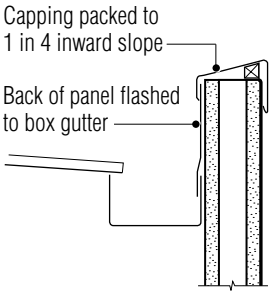


AT BOX GUTTER

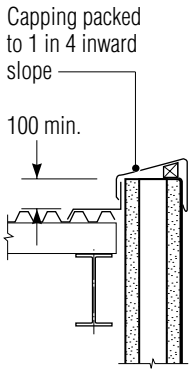


AT LOW PARAPET

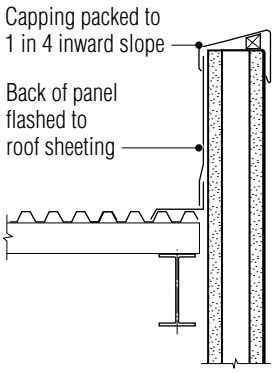


AT HIGH PARAPET

TYPICAL PANEL DETAILS AT ROOF

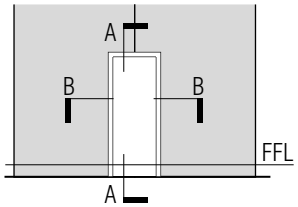


1.2 and 2.4 metre wide panels

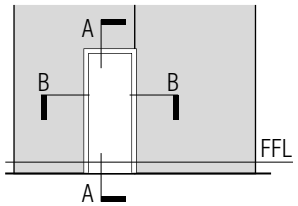


2.4 metre wide panels only

TYPICAL ARRANGEMENTS

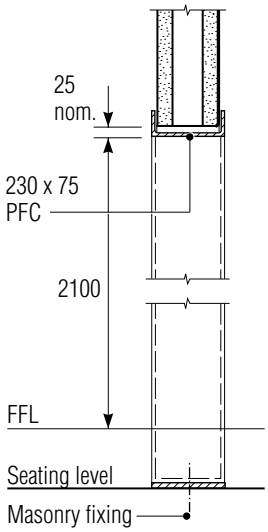


SECTION A-A

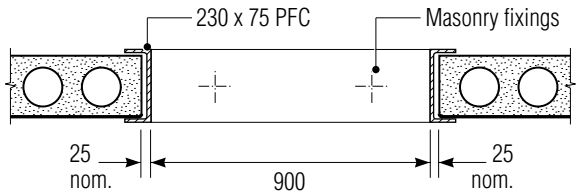


SECTION B-B

TYPICAL PERSONNEL DOOR SUB-FRAME DETAILS

## SURFACE FINISHES

Hollow core wall panels can be supplied in a variety of surface finishes. Widely used is an exposed aggregate surface which reveals the colour and texture of the aggregate. The selected aggregate should be available locally and may be quartz, granite or other crushed rock or multi-coloured river gravel.

Exposed aggregate is an economical, durable and attractive finish suitable for most applications. Smooth finishes are available as trowelled by the machine or as the off-form face.

Striated, broomed or raked finishes are available from some manufacturers. Prototypes may be cast to determine the depth of texturing best suited to a project.

Shallow rib finishes available from some manufacturers give an aesthetically pleasing appearance with shadow lines formed by the ribs. The rib surface may be left plain, broomed or water-washed to expose the aggregate.

Large, flat wall areas with penetrations for windows and doors should be detailed to allow the shedding of rainwater clear of the panel surfaces to avoid unsightly stains. Similarly, parapet capping and metal frames should be detailed to avoid concentrated water run-oft with consequent staining.

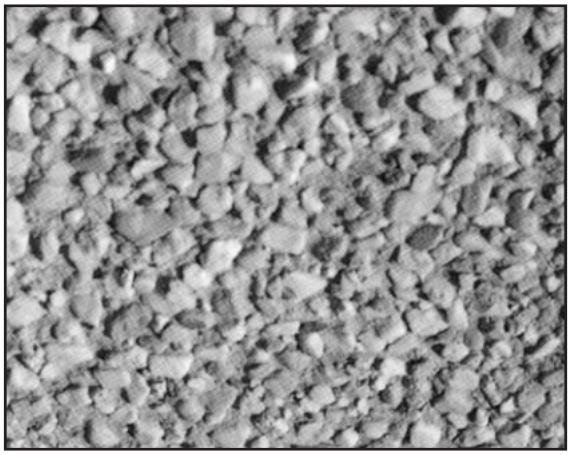

*Exposed aggregate – note that the availability of many colours of river gravel and crushed stone such as granite provides for a wide choice of appearance*

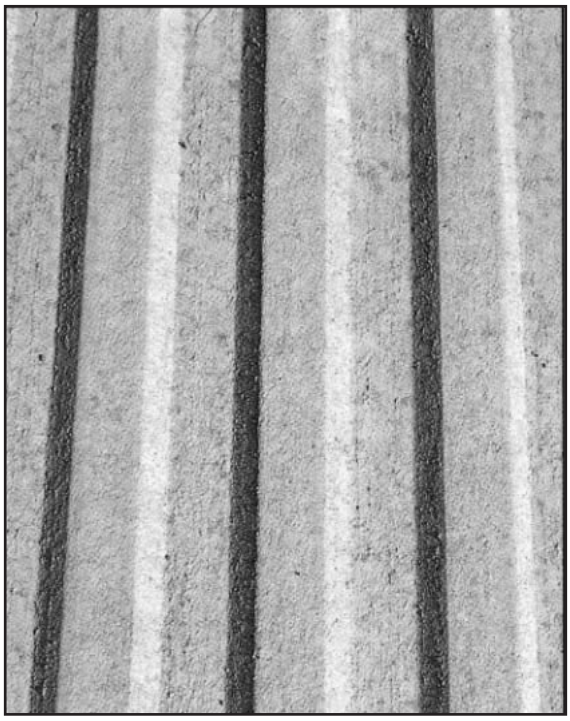

*Ribbed finish*

# GUIDE SPECIFICATION

**Scope**

This guide specification is intended to be used in the preparation of the specification for a particular project. It should be checked for compatibility with the particular job requirements by deleting any provisions that do not apply and adding special provisions if needed.

It covers the design, manufacture and erection of hollow core wall panels produced by an approved manufacturer.

**Design** *The general arrangement drawings shall be submitted for approval of layout, adequacy and dimensions prior to manufacture. The drawings shall show the locations of all panels wfth all openings detailed. Sections and details shall show the connections and edge details of the panels. Design details on drawings shall include fire resistance levels and exposure classification.*

**Materials** *Materials used in the manufacture of hollow core panels shall comply wfth the following:*

*Cement AS 3972*
*Aggregates AS 2758 1*
*Chemical Admixtures AS 1478 (The use of calcium chloride shall not be permitted.)*
*Prestressing Steel AS 1311 Stress Reileved, Low-Relaxation Strand. Strand shall be clean and free of deleterious material at the time of concreting.*
*Concrete Grade 40 and complying with the requirements of AS 3600. Concrete strength at the release of prestress shall be a minimum 20 MPa.*
*Steel plates, bolts and ferrules shall comply wfth the relevant Australian Standards.*

**Manutacture** *Hollow core panels shall be machine cast on a long-line bed and mechanically compacted. The top surface shall be finished as specified and in accordance with the sample approved prior to casting. The underside finish shall be as cast against the bed and surface voids and colour variations shall be as agreed prior to casting.*

**Tolerances** *Panels shall be suppiled in accordance wfth the following tolerances:*

| | |
|---|---|
| *Length* | *±1O mm* |
| *Width* | *±3 mm* |
| *Thickness* | *±3 mm* |
| *Squareness of end* | *±6 mm* |
| *Location of ferrules* | *±20 mm* |
| *Location of strand* | *±3 mm* |
| *Differential bowing between adjacent panels of the same length* | *15 mm* |

**Delivery and Handling** *Hollow core panels shall be lited and supported during manufacture, storage, transport and erection operations only at the manufacturer's nominated fifting positions. Panels shall be stored off the ground and be supported by full-width battens directly above each other in the stack or as per manufacturer's instructions. Only methods approved by the relevant authorities shall be used for lifting wall panels.*

**Erection** *The General Contractor shall be responsible for providing suitable access at the site to enable trucks and cranes to operate under their own power The General Contractor shall be responsible for providing true level bearing surfaces to support the hollow core panels. The structure shall be plumb and all bracing necessary for stabifity shall be in place prior to erection. The hollow core panels shall be installed only by the Manufacturer or an experienced erection contractor.*
*All bearing surfaces and dowel cores shall be grouted as detailed. All retaining clips, plates and bolts shall be fixed as detailed.*

**Attachments and Penetrations** *Attachments and fixings to the hollow core panels shall be in accordance wfth the approved details only and shall not impair the strength of the panels. Penetrations and chases to the hollow core panels shall be in accordance wfth the approved details only and shall be approved by the Manufacturer and the Structural Engineer.*

**Joints** *Joints between panels shall be sealed with an approved sealant placed against a closed-cell foam backing rod.*

**Inspection and Acceptance** *The Manufacturer shall provide, access and any necessary facilities for inspection of work in progress. Panels with structural defects shall be rectified to the approval of the Structural Engineer.*

# SAMPLE CALCULATION

**DATA**

Industrial Building
Location: 0–1 km from coast (worst case scenario)
Wind loading to AS 1170 Category 3
Fire Resistance Level: 120 mins
Durability class: B2
Design standard: AS 3600
Wall panels: 9 m high, 1.2 m wide

**SELECT PANEL**

Slenderness HA < 50
try t = 200 mm

Fire Resistance Level: 120 mins
Required $t_{eff}$: 120 mm
Strand cover: 30

Durability class: B2
Required $f'_c$: 40 MPa
Strand cover: 45 mm
Try 200-mm panel

Section area:180 000 $mm^2$
Effective thickness: 150 mm
Section modulus: 7300 x $10^3$ $mm^3$
Self wt: 4 kN/m

Strand: 9.3-mm diam
$A_{pt}$ = 54.7 $mm^2$
UTS = 102 kN
after losses $P_{eff}$ = 52 kN

For 2-MPa axial stress

$$\text{Mim. no. of strands} = \frac{180\,000 \times 2}{52 \times 10^3} = 7$$

Adopt 4 + 4 strands top and bottom with 45 mm cover

**LOADS**

Wind pressure: 0.6 kPa
Force on panel = 9 x 1.2 x 0.6 = 6.5 kN
Panel moment = 6.5 x 9/8 = 7.3 kN.m
Design moment, M* = 1.5 x 7.3 = 10.9 kN.m

**CHECK PANEL STRENGTH**

Consider 4 strands on tension face only
Effective depth $d_p$ = 200 - 45 - 5 = 150 mm

Check moment capacity
Use Chart 5.13 in the Cement and Concrete Association of Australia's *Concrete Design Handbook* (T38)

$$\text{Index } A_{pt}/bd_p = \frac{4 \times 54.7}{1200 \times 150} = 0.0012$$

$M_u/bd_p^2$ = 2.1 MPa from chart
$M_u$ = 2.1 x 1200 x $150^2$ = 56.7 kN.m
ø $M_u$ = 0.8 x 56.7 = 45.4 kN.m *OK*

Check ductility and minimum reinforcement
(AS 3600 Clause 8.4)
Concrete flexural strength = 0.6√40 = 3.8 MPa

$$\text{Prestress } \sigma_{cp} = \frac{8 \times 52 \times 10^3}{180\,000} = 2.3 \text{ MPa}$$

Cracking moment, $M_{cr}$ = 7300 x $10^3$(3.8 + 2.3)
= 44.5 kN.m
Panel $M_u$ = 56.7 kN.m *OK*

**CHECK PANELS AT ROLLER SHUTTER DOOR**

Opening 4.8 m wide by 5.0 m high

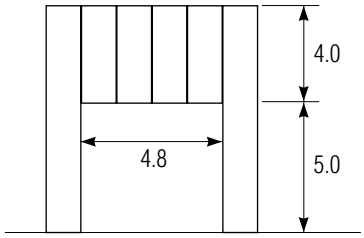


Additional wind load transferred
to adjacent panel = 4.8/2 x 9 x 0.6 = 13 kN
Additional M* = 1.5 x 13 x 9/8 = 21.9 kN.m
Total M* = 21.9 + 10.9 = 32.8 kN.m *OK*

Check axial load
Additional weight = 2.4 x 4 x 4 = 38.4 kN
Self weight at mid height = 9/2 x 4 = 18 kN
N* = 1.25(38.4 + 18) = 70.5 kN

Check limit 0.03 $f'_c$ $A_g$
(AS 3600 Clauses 5.7.4 and 11.2.4)
= 0.03 x 40 x 180 000 = 216 kN > N* *OK*

Panel may be treated as non-loadbearing for fire rating and designed as a slab for bending. Panels are satisfactory.

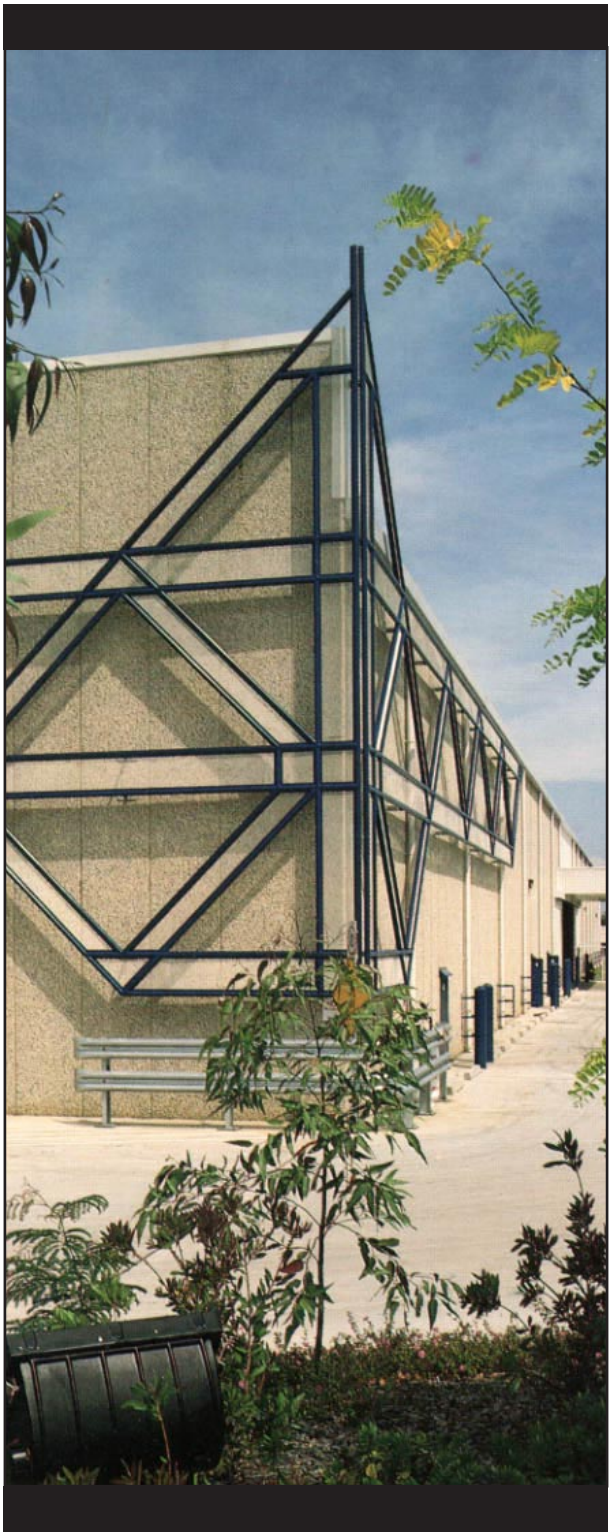

Published by the National Precast Concrete Association Australia on behalf of the following Hollowcore manufacturers.

**AUSCORE CONCRETE PTY LTD**
83 MORNINGTON - TYABB ROAD TYABB VICTORIA 3913
TELEPHONE 059 5977 4667 FACSIMILE 03 9770 1976

**DELTA CORPORATION LTD**
LOT P3 CAMPERSIE ROAD HERNE HILL WA 6056
TELEPHONE 08 9296 4111 FACSIMILE 08 9296 1184

**HOLLOWCORE CONCRETE PTY LTD**
12-14 MARIA STREET LAVERTON NORTH VICTORIA 3026
TELEPHONE 03 9369 4944 FACSIMILE 03 9369 2025

**RESCRETE INDUSTRIES PTY LTD**
214 RIVERSTONE PARADE RIVERSTONE NSW 2765
TELEPHONE 02 9627 2666 FACSIMILE 02 9627 5161

**WESTKON PRECAST CONCRETE PTY LTD**
528A BALLARAT ROAD SUNSHINE VICTORIA 3020
TELEPHONE 03 9312 3688 FACSIMILE 03 9312 1735

**NATIONAL PRECAST CONCRETE ASSOCIATION AUSTRALIA** ACN 051 987 181
LEVEL 2, 8-10 PALMER STREET
NORTH PARRAMATTA NSW 2151
TELEPHONE 02 9890 8853 FACSIMILE 02 9890 8854

PRODUCED FOR THE WWW BY:
TECHMEDIA PUBLISHING PTY LTD TELEPHONE 02 9477 7766

N P C A A